PCBUILDER

NAVIGATOR LITE
GAMING CHAIR

PCB_GC_NAVIGATOR-LITE

USER MANUAL

COMPATIBILITY CERTIFIED

GAME ON AND ON

PCBUILDER

BY GAMERS FOR GAMERS

USER MANUAL

Thank you for purchasing a PCBuilder product.
As PC enthusiasts ourselves, we really appreciate your support & trust in us.

For the best user experience & proper product care, please ensure that you read through this manual in its entirety.

Learn More

@PCBuilderZA

@PCBuilderZA

@PCBuilderAfrica

INTRODUCTION

The PCBuilder NAVIGATOR LITE Gaming Chair keeps you comfortable, focused, and in control. Its ergonomic design and adjustable height and tilt let you find your perfect position, while breathable fabric keeps you cool during long sessions. The durable steel frame delivers lasting support, and smooth-rolling castors give you freedom to move with ease. For added comfort, the magnetic velvet neck and back pillows provide extra support right where you need it. Built to enhance your gaming experience, the NAVIGATOR LITE is the chair that keeps you playing longer - and better.

Features

- Ergonomic design built for lasting gaming comfort.
- Customise your experience with adjustable height and tilt.
- Scratch-resistant PU leather for everyday durability
- Level up your support with a back and magnetic velvet neck pillow.
- Benefit from robust support with a durable steel frame.
- Smooth-rolling castor wheels for effortless movement.

What's in the box

1x NAVIGATOR LITE Gaming Chair
1x Velvet neck pillow
1x Velvet back support pillow
1x Assembly kit
1x User manual

PRODUCT OVERVIEW

Durable scratch-resistant PU leather

Magnetic neck support pillow

90-135° reclining backrest

Velvet back pillow

Adjustable 2D armrests

Gas lift class 3 that supports up to 120kg

320mm base and steel frame for exceptional stability

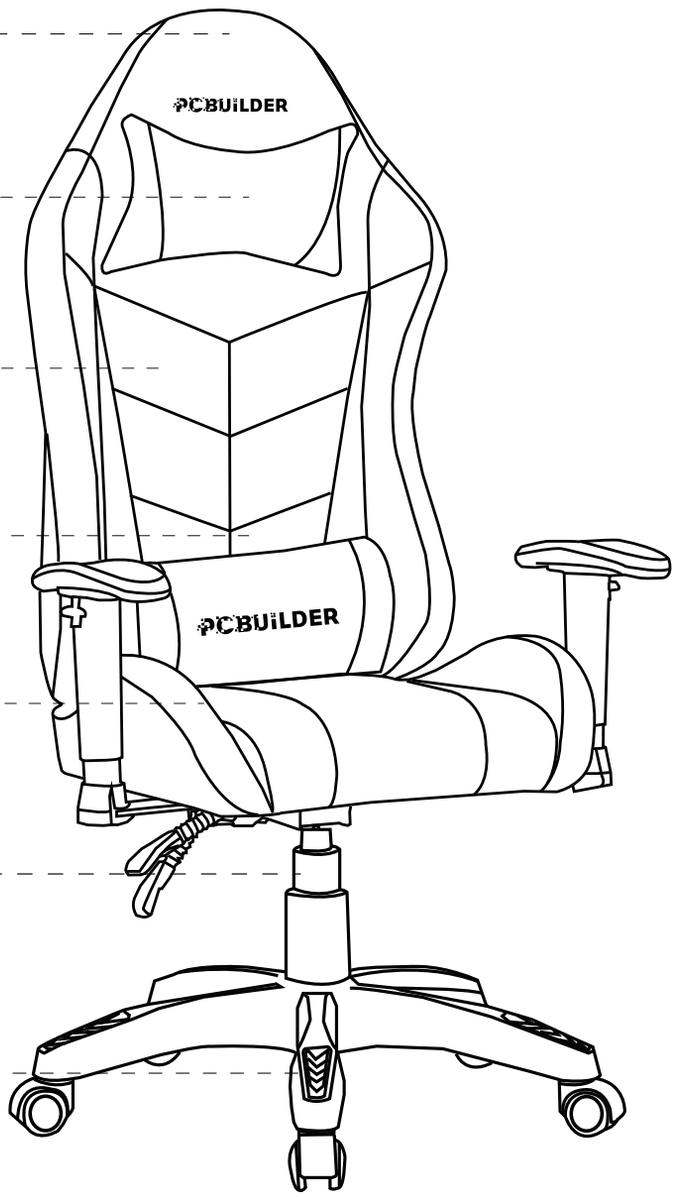

ACCESSORIES

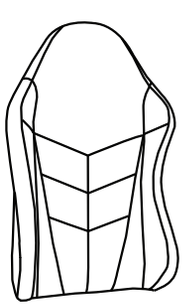

Ax1
Backrest

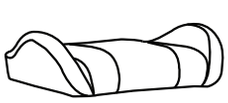

Bx1
Seat cushion

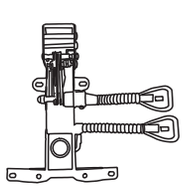

Cx1
Seat mechanism

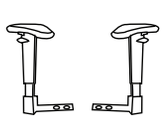

Dx2
Armrests

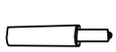

Ex1
Gas lift/piston

PCBUILDER
GAME ON AND ON

ACCESSORIES

Fx1
Mounting brackets

Gx1
Gas lift cover

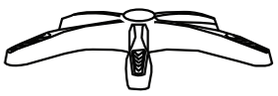

Hx1
Five-star base

Ix5
Caster wheels

Jx1
Allen key

Kx2
Bolts M8x25mm

Lx8
Bolts M6x25mm

Mx4
Bolts M6x20mm

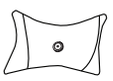

Nx1
Magnetic headrest pillow

Ox1
Back pillow

STEP 1

Insert the castors (I) into the five-star base (H) until they click securely. Place the gas lift (E) into the center of the base and slide the gas lift cover (G) over it.

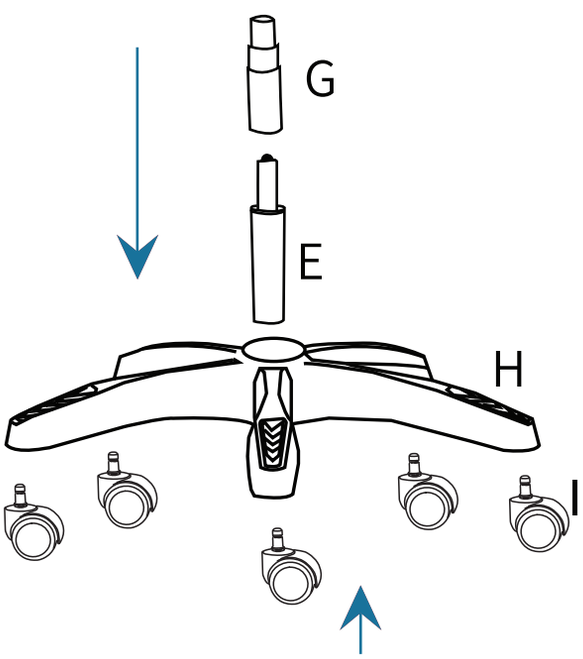

STEP 2

Attach the left and right armrests (D) to the seat cushion (B) using the M6×25mm bolts (L). Tighten with the Allen key (J).

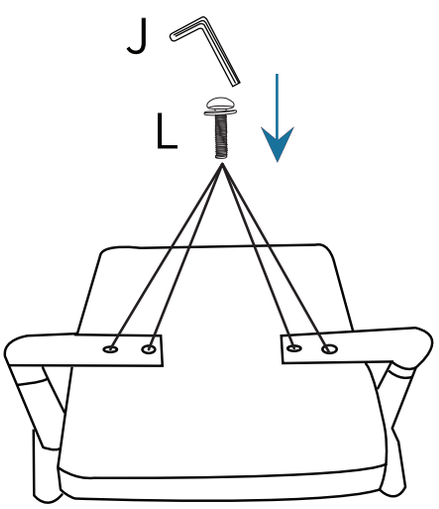

STEP 3

Flip the seat cushion (B) over and align the seat mechanism, making sure its facing forward. Secure it with the M6×20mm bolts (M) using the Allen key (J). One lever adjusts the backrest angle, and the other the gas lift height.

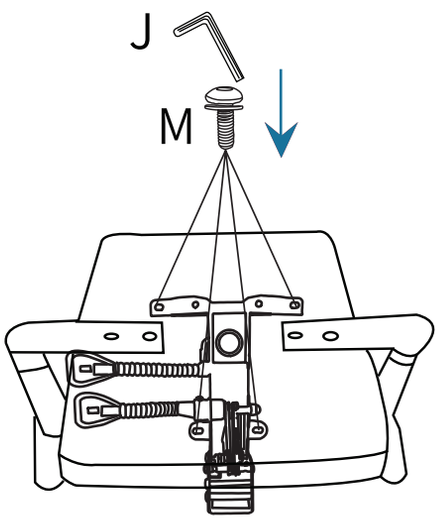

STEP 4

Attach the mounting bracket (F) to the backrest (A) using the M6×25mm bolts (L). Tighten all bolts evenly with the Allen key (J).

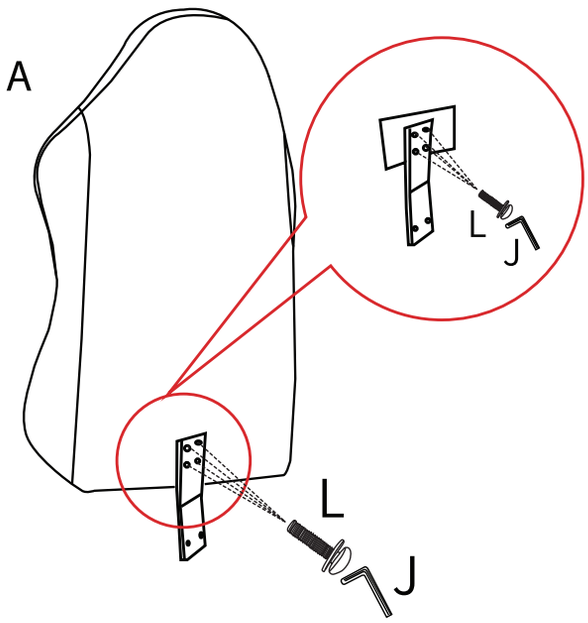

STEP 5

Connect the backrest (A) to the seat cushion (B) at the mechanism. Secure with the M8×25mm bolts (K) and tighten with the Allen key (J).

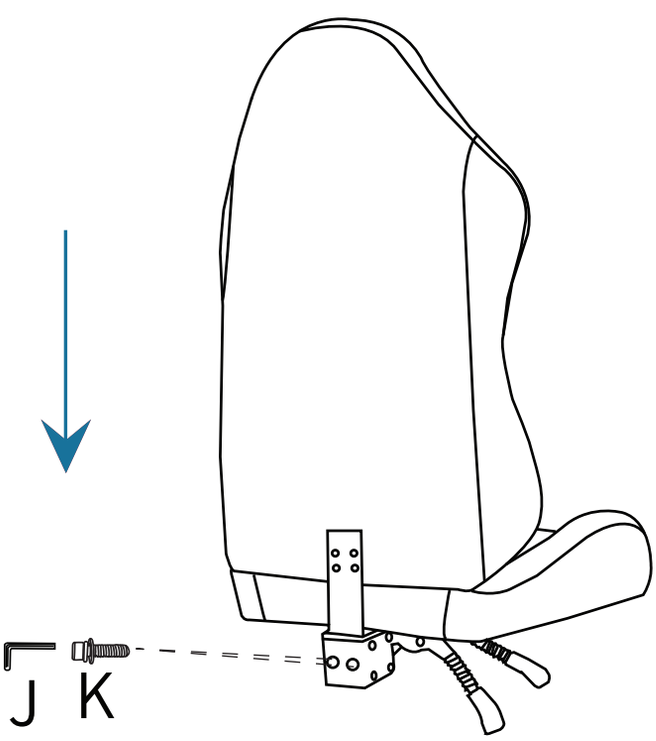

STEP 6

Position the magnetic headrest pillow (N) at the top of the backrest where comfortable.

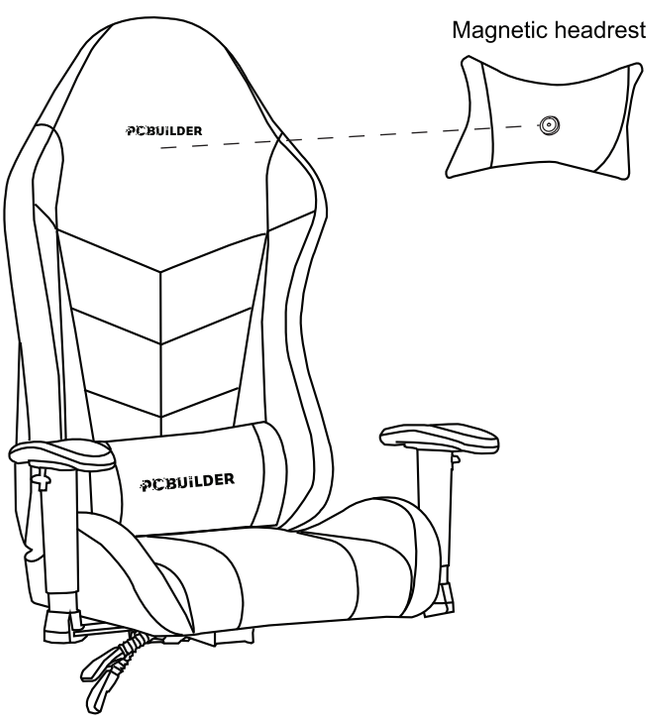

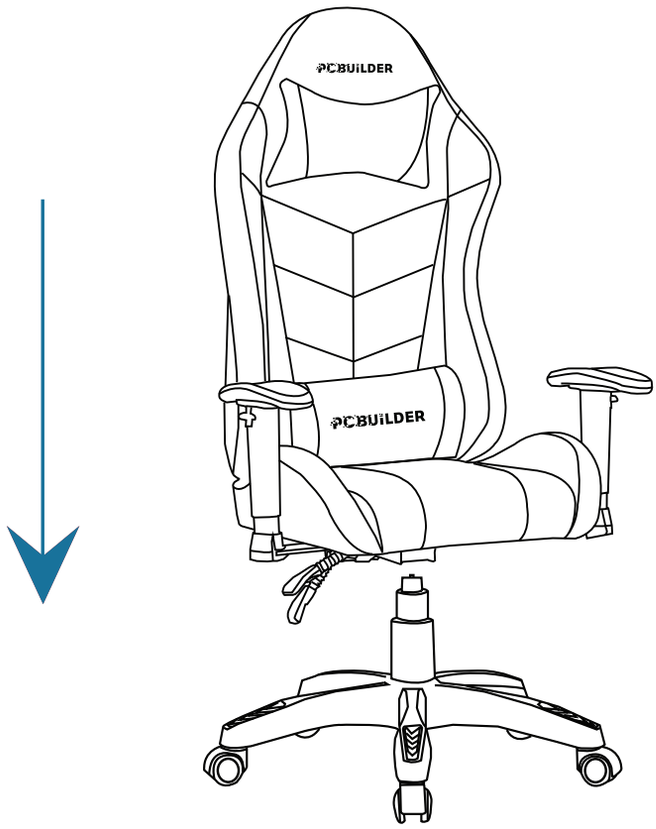

STEP 7

Place the fully assembled seat onto the gas lift (E) and base. Sit down carefully to lock the chair into place. You're ready to game!

SPECIFICATIONS

Model	PCB_GC_NAVIGATOR-LITE
Gas lift	Class 3
Base material	320mm nylon
Adjustable armrests	2D armrest (2 directions)
Adjustable backrest angle	90-135°
Seat material	Cold-moulded foam
Chair cover material	Scratch-resistant PU leather
Wheels	60mm castor
Frame construction	Steel
Weight limit	120kg
Colour	Black
Product dimensions (assembled)	72x67x116-123cm
Product weight	16.8kg
Packaging dimensions (assembled)	82x59x29cm
Packaging weight	19.3kg

WARNING & HAZARDS

1. Never disassemble or modify the product for any reason.
2. Do not store the product in extreme temperatures (-10° to 40°) or near open flame sources.
3. Do not drop the product.
4. Do not let children use this product while unsupervised.
5. Do not use harsh chemicals or strong detergents when cleaning the product.
6. Keep the product dry at all times.
7. Check that your device supports product requirements before use.
8. For ideal performance, ensure cable connections support product specifications.
9. Check that the ports are not damaged before using the product.

WARRANTY

This warranty covers a product that proves defective because of improper material or workmanship during the warranty period. Exclusions include problems caused by environmental conditions, malfunctions or damage due to negligence or mishandling of the equipment. For warranty claims and repair, please contact your local authorised reseller/service center.